NOAA
R 445
15
14
13

GENERAL NOTES

1. THIS DRAWING DEPICTS ARRANGEMENT OF R/V DELAWARE II AFTER RTE CONVERSION. ACCOMPLISHED AT DEYTENS SHIPYARDS, INC. IN OCTOBER 1996.

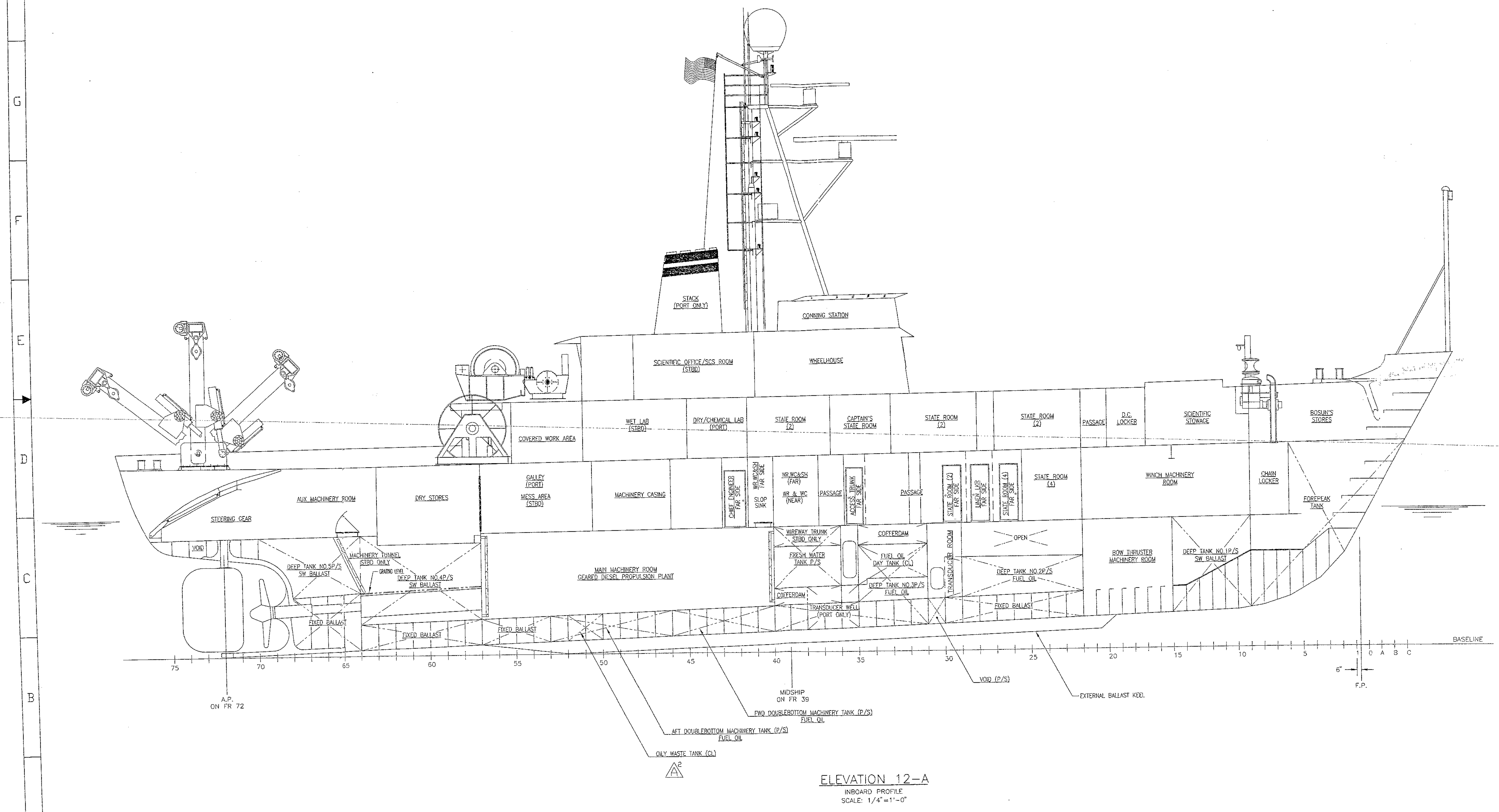

ELEVATION 12-A
INBOARD PROFILE
SCALE 1/4"=1'-0"

NOAA DRAWING NUMBER DELA-085-09 SHT 1 REV A

COMPARTMENT DIRECTORY
2ND DECK

DESCRIPTION	SIDE OF SHIP	BETWEEN FRAMES
CHAIN LOCKER	CL	4-9
WINCH MACHINERY ROOM	CL	9-22
WATER CLOSET/SHOWER	PORT	22-23 1/2
STATE ROOM (4)	PORT	22-27
WATER CLOSET/SHOWER	STBD	22-23 1/2
STATE ROOM (4)	STBD	22-27
WATER CLOSET/SHOWER	PORT	27-28 1/2
LINEN LOCKER	PORT	27-28 1/2
STATE ROOM (2)	PORT	27-32
PASSAGE	CL	25 1/2-37
STATE ROOM (2)	STBD	27-31 1/2
WASH ROOM/WATER CLOSET/SHOWER	STBD	29-31 1/2
STATE ROOM (2)	PORT	32-36
WASH ROOM/WATER CLOSET/SHOWER	PORT	32-34 1/2
ACCESS TRUNK	PORT	34 1/2-35 1/2
WASH ROOM/WATER CLOSET/SHOWER	STBD	31 1/2-34
STATE ROOM (2)	STBD	31 1/2-35 1/2
STATE ROOM (2)	PORT	36-40
LOCKER	PORT	39-40
WASH ROOM/WATER CLOSET/SHOWER	PORT	37-40
WASH ROOM/WATER CLOSET	STBD	37-40
STATE ROOM (2)	STBD	35-40
LOCKER	STBD	39-40
CHIEF ENGINEER	PORT	40-44
WARDROBE LOCKER	PORT	44-45
WASH ROOM/WATER CLOSET/SHOWER	PORT	40-41 1/2
SLOP SINK	STBD	40-41 1/2
CLEANING GEAR LOCKER	STBD	40-42 1/2
CONFRENCE ROOM/LOUNGE	STBD	40-48
COOK & STEWARD	PORT	44-49
WASH ROOM/WATER CLOSET/SHOWER	PORT	47 1/2-49
MACHINERY CASING	PORT	43-50 1/2
GALLEY	PORT	49-57
MESS AREA	STBD	48-57
MACHINERY SPACE ACCESS	STBD	56-57
DRY STORES	CL	57-63
AUX MACHINERY ROOM	CL	63-76
STORES-HOLD	PORT	68-77 1/2
STORES-HOLD	STBD	68-77 1/2

HOLD

DESCRIPTION	SIDE OF SHIP	BETWEEN FRAMES
DEEP TANK NO. 2	PORT	22-31
DEEP TANK NO. 2	STBD	22-31
PASSAGE	PORT	22-40
PASSAGE	STBD	29-40
DEEP TANK NO. 3 (HIGH HAT)	PORT	31-35
FUEL OIL DAY TANK	CL	31-35
DEEP TANK NO. 3 (HIGH HAT)	STBD	31-35
FRESH WATER TANK	PORT	36-40
FRESH WATER TANK	STBD	36-40
MAIN MACHINERY RM/GEARED DIESEL PROP PLANT	CL	40-57
MAIN MACHINERY CONTROL ROOM	STBD	40-46
STORES	PORT	55-57
DEEP TANK NO. 4	PORT	57-64
MACHINERY TUNNEL	STBD	57-65
DEEP TANK NO. 4	STBD	57-64
DEEP TANK NO. 5	PORT	64-70
DEEP TANK NO. 5	STBD	64-70
VOID	CL	70-76

COMPARTMENT DIRECTORY
NAVIGATION BRIDGE DECK

DESCRIPTION	SIDE OF SHIP	BETWEEN FRAMES
WHEELHOUSE	CL	32-51
RADIO ROOM	PORT	35-41
STACK	PORT	43-46
SHIP'S OFFICE/NAVIGATION ROOM	STBD	35-45
SCIENTIFIC OFFICE/SCS ROOM	STBD	41-48
FAN ROOM	STBD	40-42
BATTERY LOCKER	STBD	44-45
FAN ROOM	STBD	48-49 1/2

MAIN DECK

DESCRIPTION	SIDE OF SHIP	BETWEEN FRAMES
BOSUN'S STORE	CL	A-9
PAINT/FLAM LIQ LOCKER	PORT	5-9
PASSAGE	STBD	9-17
SCIENTIFIC STOWAGE	STBD	9-12
TRASH STOW/COMPACTOR ROOM	STBD	12-17
SCIENTIFIC STOWAGE	PORT	9-17
SCIENTIFIC FREEZER	STBD	17-22 1/2
D.C. LOCKER	STBD	17-20
SHIP'S LOCKER	PORT	17-20
ACCESS TRUNK	PORT	17-20
SCIENTIFIC STOWAGE	PORT	17-20
FAN ROOM	PORT	17-23
STATE ROOM (2)	PORT	22-27
WATER CLOSET/SHOWER	PORT	24 1/2-28
STATE ROOM (2)	PORT	23-31
STATE ROOM (2)	PORT	27-33
WASH ROOM/WATER CLOSET/SHOWER	PORT	28-30 1/2
EMERGENCY GENERATOR ROOM	STBD	29-36
SHIP'S CREW WET GEAR READY ROOM/LOCKER	STBD	36-40
FAN ROOM	STBD	40-44
PASSAGE	PORT	17-41
CAPTAIN'S STATE ROOM	STBD	30-36 1/2
WASH ROOM/WATER CLOSET/SHOWER	PORT	36-38 1/2
WASH ROOM/WATER CLOSET/SHOWER	PORT	36-38 1/2
STATE ROOM (2)	PORT	36 1/2-41 1/2
WET LAB	PORT	41-1/2 51
UPTAKE	PORT	43-46
FAN ROOM	PORT	50-51
COVERED WORK AREA	PORT	51-58
DRY/CHEMICAL LAB	STBD	41-55

COMPARTMENT DIRECTORY
DOUBLE BOTTOM

DESCRIPTION	SIDE OF SHIP	BETWEEN FRAMES
FOREPEAK TANK	CL	0-9
DEEP TANK NO. 1	CL	9-15
BOW THRUSTER MACHINERY ROOM	CL	15-22
VOID	PORT	30-31
TRANSDUCER ROOM	CL	29-31
VOID	STBD	30-31
DEEP TANK NO. 3	PORT	31-40
DEEP TANK NO. 3	STBD	31-40
TRANSDUCER WELL	PORT	35-38
DOUBLE BOTTOM MACHINEERY TANK FWD	PORT	40-46
DOUBLE BOTTOM MACHINEERY TANK FWD	STBD	40-46
DOUBLE BOTTOM MACHINEERY TANK AFT	PORT	46-53
DOUBLE BOTTOM MACHINEERY TANK AFT	STBD	46-53
A1 OILY WASTE TANK	CL	50-52
VOID (FIXED BALLAST)	CL	53-58
VOID (FIXED BALLAST)	CL	58-64
VOID (FIXED BALLAST)	CL	64-68

ENGINEERING

TYPE	MANUFACTURER	RATING	QTY.
MAIN PROPULSION (GEARED DIESEL)	GM (EMD)	1,230 HP	1
PROPELLER (4-BLADE, FIXED PITCH)	COLUMBAN BRONZE	96 INCH	1
SHIPS SERVICE GENERATORS	STEWART & STEVENSON	270 KW	2
EMERGENCY GENERATOR	DETROIT DIESEL	70 KW 87.5 KVA	1

NOTE: ELECTRICAL SERVICE: 440 VAC 3 PHASE, 220 VAC 3 PHASE, 110 VAC SINGLE PHASE

DECK MACHINERY

TYPE	MANUFACTURER	PULL\CAPACITY	QTY.
TRAWL WINCHES	MARINE HYDRAULICS	20,000 Lb	2
35 FT TELESCOPIC CRANE	AURORA CRANE CORPORATION	10,000 Lb	1
14 FT FORWARD A-FRAME	AURORA CRANE CORPORATION	5,000 Lb	1
17 FT AFT A-FRAME	AURORA CRANE CORPORATION	7,000 Lb	1
STERN GANTRY	NETEC INC.	20,000 Lb	1
18" DIA. CAPSTAN WINDLASS	NETEC INC.	12,800 Lb (1 1/16" DI-LOK CHAIN) 5500 Lb @50 FPM (MOORING)	1
18" DIA. CAPSTAN	NETEC INC.	5,000 Lb	1
NET REEL	NETEC INC.	20,000 Lb	1
OCEANOGRAPHIC WINGH	NETEC INC.	20,000 Lb	1
FORWARD HYDROGRAPHIC WINCH	ALMON A. JOHNSON INC.	5,000 Lb	1
AFT HYDROGRAPHIC WINCH	ALMON A. JOHNSON INC.	5,000 Lb	1
CONSTANT TENSION WINCH	NETEC INC.	3,500 Lb	1

LIST OF SMALL BOATS, LIFERAFTS AND DAVITS

TYPE	MANUFACTURER	CAPACITY	QTY.
RIGID HULL INFLATABLE BOAT	ZODIAC H472 SOLAS	6 PERSON	1
RIGID CONTAINER INFLATABLE LIFERAFTS	ELLIOT	10 PERSON	2
RIGID CONTAINER INFLATABLE LIFERAFTS	ELLIOT	25 PERSON	4
		TOTAL CAPACITY: 126	
BOAT DAVIT	HARDING-WATERCRAFT	900 Kg	1

FRESHWATER SYSTEM

EVAPORATORS	1
MAXINUM PRODUCTION	2,400 GPD
NORMAL CONSUMPTION	600 GPD
STORAGE CAPACITY	7,300 GALLONS

SEWAGE WASTE CONTROL

SYSTEM TYPE	AEROBIC BACTERIAL
MANUFACTURER	ST. LOUIS SHIP
HOLDING CAPACITY	30 DAYS

OILY WASTE

SYSTEM TYPE	OILY WATER SEPARATOR
MANUFACTURER	HARCO
FLOW RATE	4 GPM

HEIGHTS ABOVE BASELINE AT CL

HOLD AT MIDSHIP	5'-6"
2ND DECK AT MIDSHIP	14'-6"
MAIN DECK AT MIDSHIP	22'-6"
NAVIGATION BRIDGE DECK AT MIDSHIP	30'-6"
FORECASTLE DECK AT STEM	31'-6"
WHEELHOUSE TOP AT MIDSHIP	37'-6"
S-BAND RADAR PLATFORM	57'-7"
X-BAND RADAR PLATFORM	64'-0"

TABLE OF CONTENTS

DESCRIPTION

SHEET 1
- GENERAL DIMENSIONS AND DATA
- COMPARTMENT DIRECTORY
- INBOARD PROFILE

SHEET 2
- OUTBOARD PROFILE STARBOARD
- OUTBOARD PROFILE PORT

SHEET 3
- NAVIGATION BRIDGE DECK PLAN VIEW
- MAIN DECK PLAN VIEW
- 2ND DECK PLAN VIEW
- HOLD PLAN VIEW

SHEET 4
- MIDSHIP AND TYPICAL SECTIONS
- DOUBLE BOTTOM DECK PLAN VIEW
- TOPSIDE PLAN VIEW
- WHEELHOUSE TOP PLAN VIEW
- S-BAND RADAR PLATFORM PLAN VIEW
- X-BAND RADAR PLATFORM PLAN VIEW

SHEET 5
- LIST OF MACHINERY

PRINCIPAL DIMENSIONS

LENGTH BETWEEN PERPENDICULARS	132'-0"
LENGTH OVERALL	155'-6"
BEAM (MOLDED)	30'-0"
BREADTH (EXTREME)	30'-9"
DEPTH TO MAIN DECK AMIDSHIPS (MOLDED)	22'-0"
A9 DESIGN DRAFT (AMIDSHIPS)	15'-10 13/16"
DISPLACMENT AT DESIGN DRAFT	871 LT
FRAME SPACINGS	FWD FR 22 =18", AFT FR 22 =24"

GENERAL INFORMATION

DESCRIPTION	RESEARCH VESSEL
LAUNCHED	DECEMBER 1967
DELIVERED	OCTOBER 1968
CALL LETTERS	KHBO
DESIGNER	GEORGE C. SHARP
BUILDER	SOUTH PORTLAND ENGINEERING SOUTH PORTLAND, MAINE
HOMEPORT	WOODS HOLE, MA
HULL	WELDED STEEL
A6 CLASSIFATION (ABS EQUIPMENT NUMERAL)	U9
A7 ENDURANCE	12 DAYS
ENDURANCE CONSTRANT	FUEL

COMPLEMENT

A8 OFFICERS	6
UNLICENSED CREW	12
SCIENTIST	14
TOTAL COMPLEMENT:	32

HABITABILITY

SINGLE STATEROOM	2
DOUBLE STATEROOM	11
4 PERSON STATEROOM	2
TOTAL BERTHING =	32
GENERAL MESS ACCOMODATION	19

REVISIONS

REV	ZONE	DESCRIPTION	BY	DATE	APPD
A		ADDED:	KRG	5/97	
	7-A	1. OILY WASTE TANK TO COMPARTMENT DIRECTORY.			
	13-A 54-F	2. CALL-OUT FOR OILY WASTE TANK.			
	35-A 58-C	3. VENTILATOR AT FRAME 14 (P), FORECASTLE DECK.			
	39-F	4. SLOP SINK IN DRY STORES.			
	45-F 54-F	5. MANHOLE FOR ACCESS TO OILY WASTE TANK.			
	3-C	6. CLASSIFICATION (ABS EQUIPMENT NUMERAL)			
		MODIFIED:			
	3-C	7. GENERAL INFORMATION (ENDURANCE), WAS 24 DAYS. (ENDURANCE CONSTRANT), WAS STABILITY.			
	3-C	8. COMPLEMENT (LICENSED), WAS 8 (CREW), WAS 9 (SCIENTISTS), WAS 11			
	3-D	9. PRINCIPAL DIMENSIONS (DESIGN DRAFT), WAS 16'-6". (DISPLACEMENT AT DESIGN DRAFT), WAS 931 LT.			
	24-C 34-F 42-C	10. MANHOLE ACCESS TO CHAIN LOCKER (DELETED MANHOLE ON MAIN DECK IN PAINT LOCKER), AND ADDED SCUTTLE IN AFTER BHD OF CHAIN LOCKER AT FR 9.			
	39-F	11. DRYER LOCATION (STACKED WITH WASHER), WAS AFT OF WASHER.			
	20-B 28-B 36-D 60-D	12. GYRO STEP REPEATER AND REMOTE ENG SPEED / BOW THRUSTER CONSOLE (P/S) LOCATIONS (SWITCHED).			
		DELETED:			
	35-C 58-C	13. GOOSE NECK VENT ON NAV BRIDGE DECK.			
		CHANGES MADE ABOVE INCORPORTATE COMMENTS PER NOAA LETTER DEL II-397-JH DATED 18 SEPTEMBER, 1996, AND DOI 260.			

NO.	TITLE	DWG. NO.

REFERENCES

FOR	REV	NAME	DATE
NOAA			
ABS			
USCG			
USPHS			

DETYENS SHIPYARDS, INC.
2383 HIGHWAY 41
MT. PLEASANT, S.C. 29464

NATIONAL OCEANIC AND
ATMOSPHERIC ADMINISTRATION
SYSTEMS AQUISITION OFFICE

DELAWARE II (RTE)

TIDEWATER
NAVAL ARCHITECTS, Inc.
355 Crawford Parkway, Suite 214, Portsmouth, VA 23704

DRAWN K. GARRISON DATE 6-96
CHECKED R. GREEN DATE 9/03/96
APPROVED DATE
CONTRACT NO. 50-SPNA-5-00051

DRAWING TITLE
BOOKLET OF
GENERAL DRAWINGS

SIZE H | CAGE CODE 0YLJ5 | NOAA DRAWING NUMBER DELA-085-09 | REV A
SCALE: AS NOTED | SHEET 1 OF 5

NOAA DWG NO DELA-085-09 SHT 1 REV A

DELA-085-09 REV A

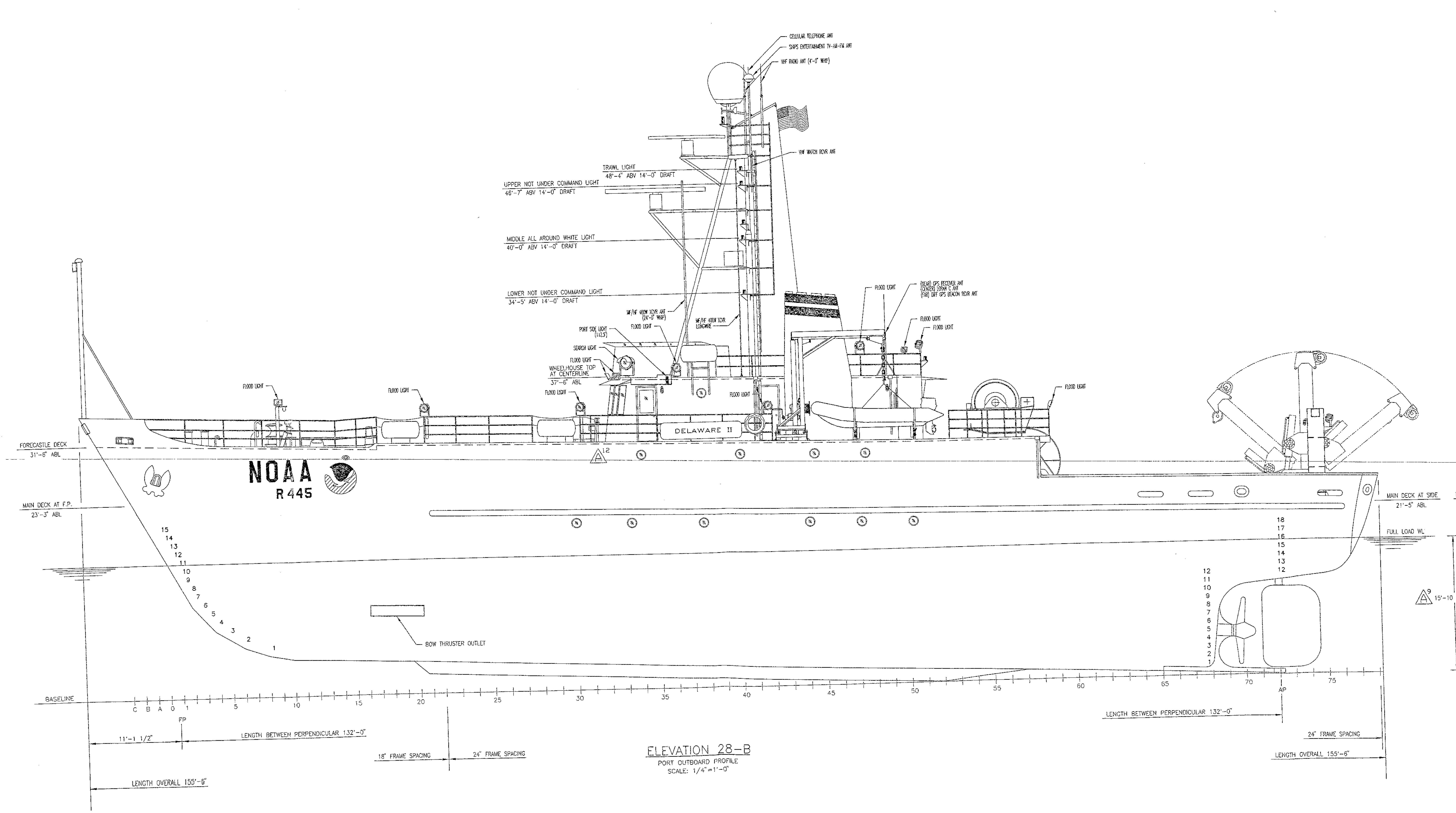
CELLULAR TELEPHONE ANT
SHIPS ENTERTAINMENT TV-AM-FM ANT
VHF RADIO ANT (4'-0" WHIP)
VHF WATCH RCVR ANT
TRAWL LIGHT
48'-4" ABV 14'-0" DRAFT
UPPER NOT UNDER COMMAND LIGHT
46'-7" ABV 14'-0" DRAFT
MIDDLE ALL AROUND WHITE LIGHT
40'-0" ABV 14'-0" DRAFT
LOWER NOT UNDER COMMAND LIGHT
34'-5' ABV 14'-0" DRAFT
MF/HF 400W XCVR ANT (24'-0" WHIP)
MF/HF 400W XCVR LONGWIRE
PORT SIDE LIGHT (112.5')
FLOOD LIGHT
SEARCH LIGHT
FLOOD LIGHT
WHEELHOUSE TOP AT CENTERLINE
37'-6" ABL
FLOOD LIGHT
FLOOD LIGHT
(NEAR) GPS RECEIVER ANT
(CENTER) LORAN C ANT
(FAR) DIFF GPS BEACON RCVR ANT
FLOOD LIGHT
FLOOD LIGHT
FLOOD LIGHT
FLOOD LIGHT
FLOOD LIGHT
FLOOD LIGHT
DELAWARE II
FORECASTLE DECK
31'-6" ABL
NOAA
R 445
MAIN DECK AT F.P.
23'-3" ABL
BOW THRUSTER OUTLET
MAIN DECK AT SIDE
21'-5" ABL
FULL LOAD WL
BASELINE
C B A 0 1 5 10 15 20 25 30 35 40 45 50 55 60 65 70 75
FP
AP
11'-1 1/2"
LENGTH BETWEEN PERPENDICULAR 132'-0"
18" FRAME SPACING
24" FRAME SPACING
LENGTH OVERALL 155'-6"

ELEVATION 28-B
PORT OUTBOARD PROFILE
SCALE: 1/4"=1'-0"

NOAA DRAWING NUMBER	SHT	REV
DELA-085-09	2	A

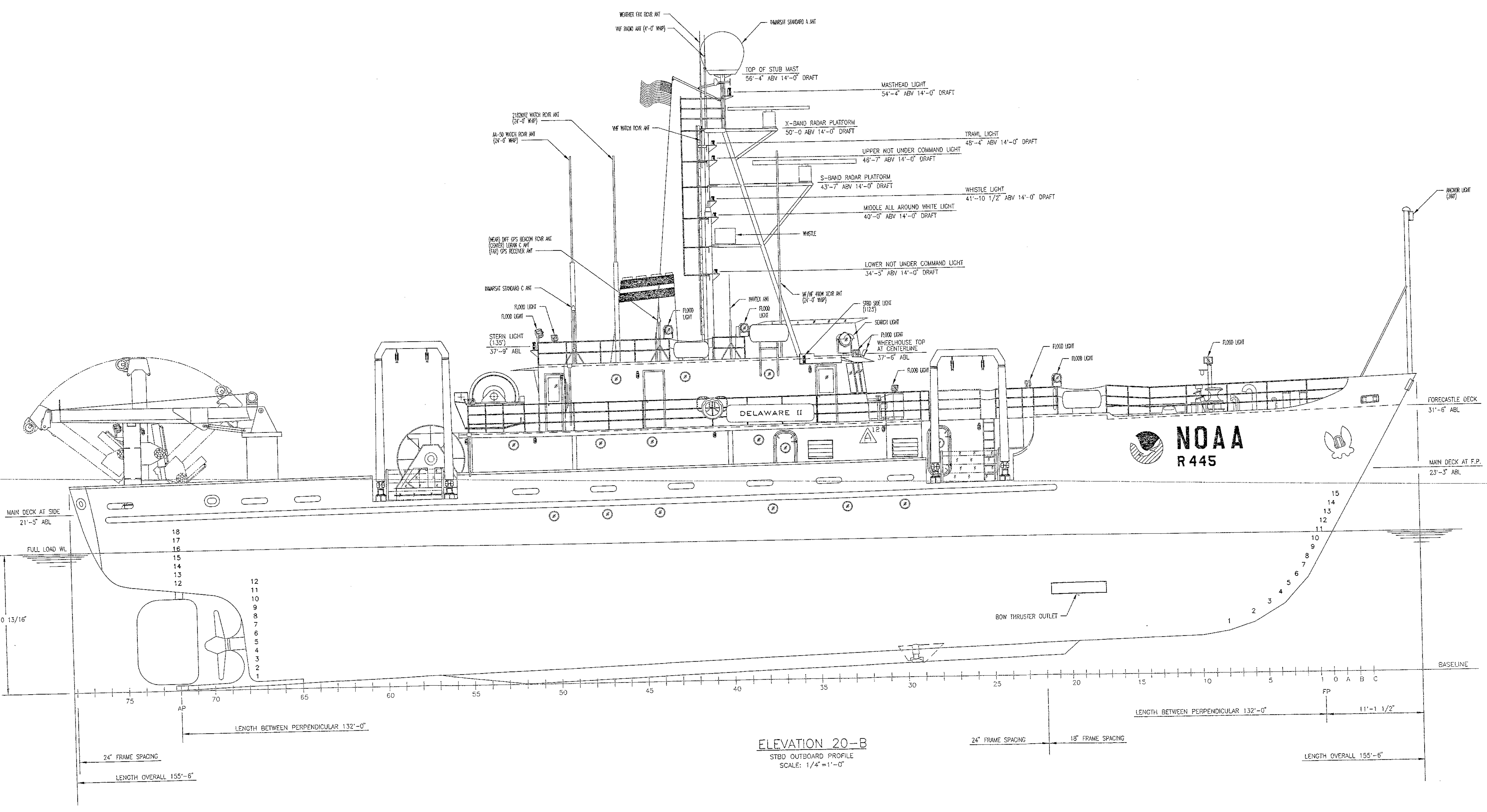
WEATHER FAX RCVR ANT
VHF RADIO ANT (4'-0" WHIP)
INMARSAT STANDARD A ANT
TOP OF STUB MAST
56'-4" ABV 14'-0" DRAFT
MASTHEAD LIGHT
54'-4" ABV 14'-0" DRAFT
2182KHZ WATCH RCVR ANT (24'-0" WHIP)
AA-50 WATCH RCVR ANT (24'-0" WHIP)
VHF WATCH RCVR ANT
X-BAND RADAR PLATFORM
50'-0 ABV 14'-0" DRAFT
TRAWL LIGHT
48'-4" ABV 14'-0" DRAFT
UPPER NOT UNDER COMMAND LIGHT
46'-7" ABV 14'-0" DRAFT
S-BAND RADAR PLATFORM
43'-7" ABV 14'-0" DRAFT
WHISTLE LIGHT
41'-10 1/2" ABV 14'-0" DRAFT
MIDDLE ALL AROUND WHITE LIGHT
40'-0" ABV 14'-0" DRAFT
WHISTLE
(NEAR) DIFF GPS BEACON RCVR ANT
(CENTER) LORAN C ANT
(FAR) GPS RECEIVER ANT
LOWER NOT UNDER COMMAND LIGHT
34'-5" ABV 14'-0" DRAFT
INMARSAT STANDARD C ANT
NAVTEX ANT
MF/HF 400W XCVR ANT (24'-0" WHIP)
STBD SIDE LIGHT (112.5')
SEARCH LIGHT
FLOOD LIGHT
FLOOD LIGHT
FLOOD LIGHT
FLOOD LIGHT
STERN LIGHT (135')
37'-9" ABL
WHEELHOUSE TOP AT CENTERLINE
37'-6" ABL
FLOOD LIGHT
FLOOD LIGHT
FLOOD LIGHT
FLOOD LIGHT
ANCHOR LIGHT (360')
DELAWARE II
NOAA
R 445
FORECASTLE DECK
31'-6" ABL
MAIN DECK AT F.P.
23'-3" ABL
MAIN DECK AT SIDE
21'-5" ABL
FULL LOAD WL
15'-10 13/16"
BOW THRUSTER OUTLET
BASELINE
75 70 65 60 55 50 45 40 35 30 25 20 15 10 5 1 0 A B C
AP
FP
LENGTH BETWEEN PERPENDICULAR 132'-0"
11'-1 1/2"
24" FRAME SPACING
18" FRAME SPACING
LENGTH OVERALL 155'-6"

ELEVATION 20-B
STBD OUTBOARD PROFILE
SCALE: 1/4"=1'-0"

SIZE	CAGE CODE	NOAA DRAWING NUMBER	REV
H	OYLJ5	DELA-085-09	A
SCALE: AS NOTED		SHEET 2 OF 5	

DELA-085-09

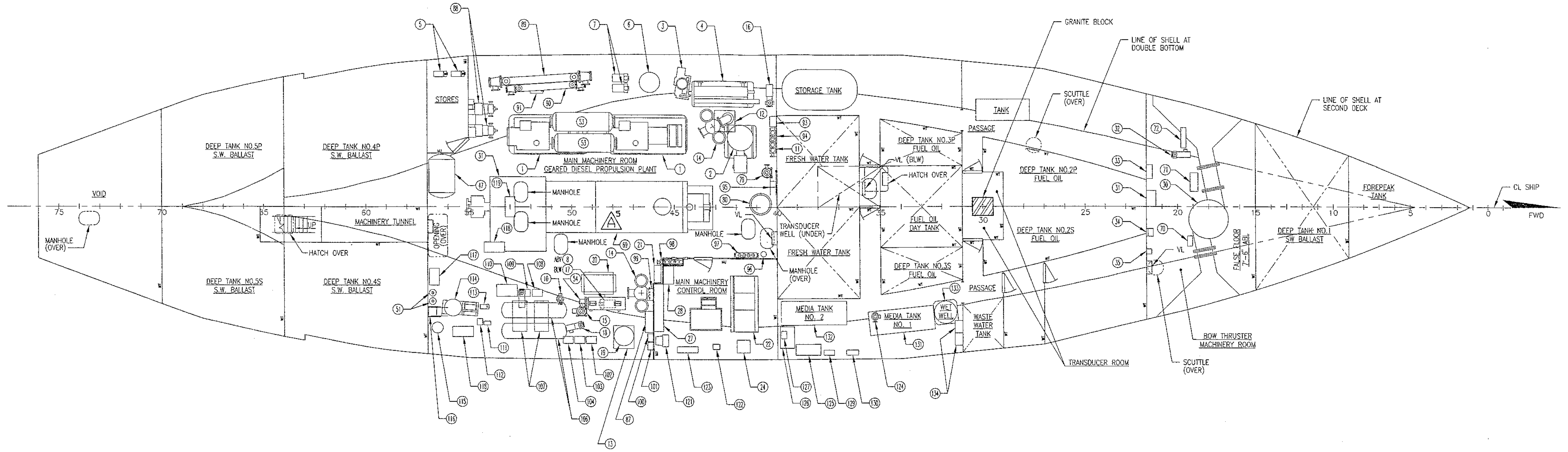

STORES
DEEP TANK NO.5P S.W. BALLAST
DEEP TANK NO.4P S.W. BALLAST
DEEP TANK NO.5S S.W. BALLAST
DEEP TANK NO.4S S.W. BALLAST
VOID
MANHOLE (OVER)
MACHINERY TUNNEL
HATCH OVER
OPENING (OVER)
MAIN MACHINERY ROOM GEARED DIESEL PROPULSION PLANT
MANHOLE
MAIN MACHINERY CONTROL ROOM
STORAGE TANK
FRESH WATER TANK
TRANSDUCER WELL (UNDER)
MANHOLE (OVER)
VL (BLW)
HATCH OVER
DEEP TANK NO.3P FUEL OIL
FUEL OIL DAY TANK
DEEP TANK NO.3S FUEL OIL
MEDIA TANK NO. 2
MEDIA TANK NO. 1
WET WELL
WASTE WATER TANK
TANK
PASSAGE
SCUTTLE (OVER)
DEEP TANK NO.2P FUEL OIL
DEEP TANK NO.2S FUEL OIL
GRANITE BLOCK
LINE OF SHELL AT DOUBLE BOTTOM
LINE OF SHELL AT SECOND DECK
TRANSDUCER ROOM
BOW THRUSTER MACHINERY ROOM
FALSE FLOOR 7'-6" (ABL)
DEEP TANK NO.1 SW BALLAST
FOREPEAK TANK
CL SHIP
FWD
VL
75
70
65
60
55
50
45
40
35
30
25
20
15
10
5
0

PLAN VIEW 45–E

HOLD

SCALE: 1/4"=1'-0"

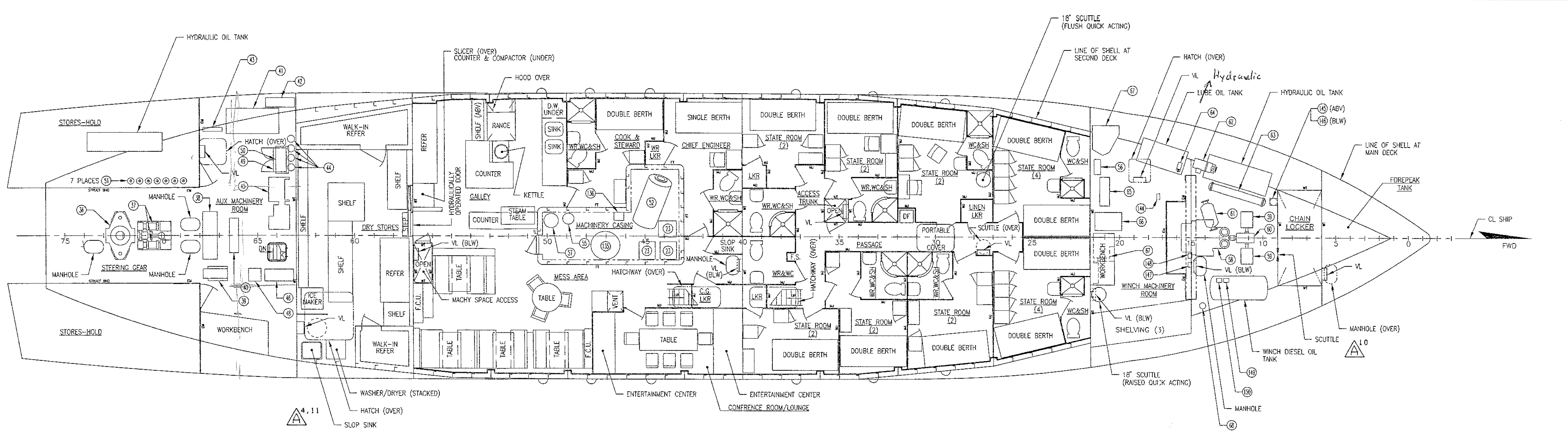

HYDRAULIC OIL TANK
STORES–HOLD
7 PLACES
MANHOLE
STEERING GEAR
AUX MACHINERY ROOM
HATCH (OVER)
VL
WORKBENCH
SHELF
WALK-IN REFER
DRY STORES
REFER
ICE MAKER
SLICER (OVER) COUNTER & COMPACTOR (UNDER)
HOOD OVER
HYDRAULICALLY OPERATED DOOR
RANGE
COUNTER
GALLEY
KETTLE
STEAM TABLE
D.W. UNDER
SINK
VL (BLW)
OPEN
MACHY SPACE ACCESS
TABLE
F.C.U.
MESS AREA
MACHINERY CASING
DOUBLE BERTH
WR,WC&SH
COOK & STEWARD
WR LKR
SINGLE BERTH
CHIEF ENGINEER
HATCHWAY (OVER)
VENT
C.G. LKR
SLOP SINK
STATE ROOM (2)
ACCESS TRUNK
LKR
WR&WC
F.S.
PASSAGE
DF
PORTABLE COVER
LINEN LKR
SCUTTLE (OVER)
STATE ROOM (4)
WC&SH
WORKBENCH
WINCH MACHINERY ROOM
SHELVING (3)
CHAIN LOCKER
FOREPEAK TANK
18" SCUTTLE (FLUSH QUICK ACTING)
LINE OF SHELL AT SECOND DECK
HATCH (OVER)
Hydraulic
LUBE OIL TANK
HYDRAULIC OIL TANK
(ABV)
(BLW)
LINE OF SHELL AT MAIN DECK
CL SHIP
FWD
MANHOLE (OVER)
SCUTTLE
WINCH DIESEL OIL TANK
MANHOLE
18" SCUTTLE (RAISED QUICK ACTING)
ENTERTAINMENT CENTER
CONFRENCE ROOM/LOUNGE
WASHER/DRYER (STACKED)
HATCH (OVER)
SLOP SINK
4,11
10

PLAN VIEW 37–E

2ND DECK

SCALE: 1/4"=1'-0"

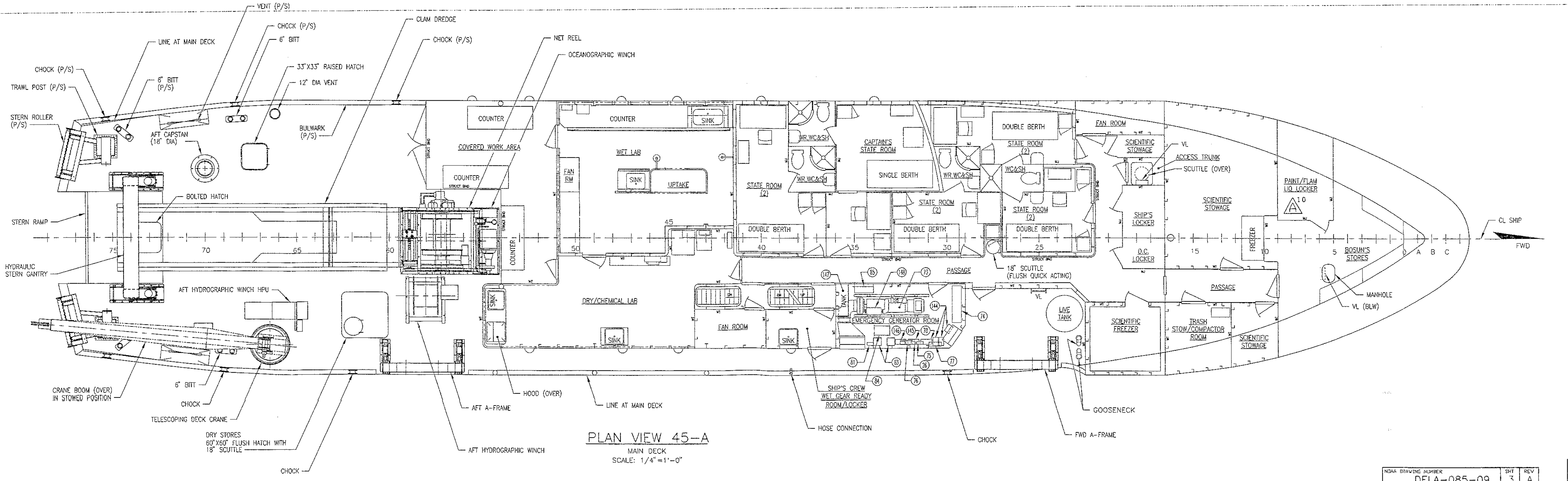

VENT (P/S)
CHOCK (P/S)
6" BITT
CLAM DREDGE
LINE AT MAIN DECK
CHOCK (P/S)
TRAWL POST (P/S)
6" BITT (P/S)
33"X33" RAISED HATCH
12" DIA VENT
STERN ROLLER (P/S)
AFT CAPSTAN (18" DIA)
BULWARK (P/S)
NET REEL
OCEANOGRAPHIC WINCH
COUNTER
COVERED WORK AREA
SINK
WET LAB
UPTAKE
FAN RM
BOLTED HATCH
STERN RAMP
HYDRAULIC STERN GANTRY
AFT HYDROGRAPHIC WINCH HPU
DRY/CHEMICAL LAB
CAPTAIN'S STATE ROOM
SINGLE BERTH
STATE ROOM (2)
DOUBLE BERTH
WR,WC&SH
WC&SH
FAN ROOM
SCIENTIFIC STOWAGE
VL
ACCESS TRUNK
SCUTTLE (OVER)
SHIP'S LOCKER
D.C. LOCKER
PAINT/FLAM LIQ LOCKER
FREEZER
BOSUN'S STORES
PASSAGE
EMERGENCY GENERATOR ROOM
18" SCUTTLE (FLUSH QUICK ACTING)
LIVE TANK
SCIENTIFIC FREEZER
TRASH STOW/COMPACTOR ROOM
MANHOLE
VL (BLW)
CL SHIP
FWD
CRANE BOOM (OVER) IN STOWED POSITION
6" BITT
CHOCK
TELESCOPING DECK CRANE
DRY STORES 60"X60" FLUSH HATCH WITH 18" SCUTTLE
CHOCK
AFT A-FRAME
AFT HYDROGRAPHIC WINCH
HOOD (OVER)
LINE AT MAIN DECK
SHIP'S CREW WET GEAR READY ROOM/LOCKER
HOSE CONNECTION
CHOCK
FWD A-FRAME
GOOSENECK
75
70
65
60
50
45
40
35
30
25
15
10
5
A
B
C

PLAN VIEW 45–A

MAIN DECK

SCALE: 1/4"=1'-0"

NOAA DRAWING NUMBER	SHT	REV
DELA–085–09	3	A

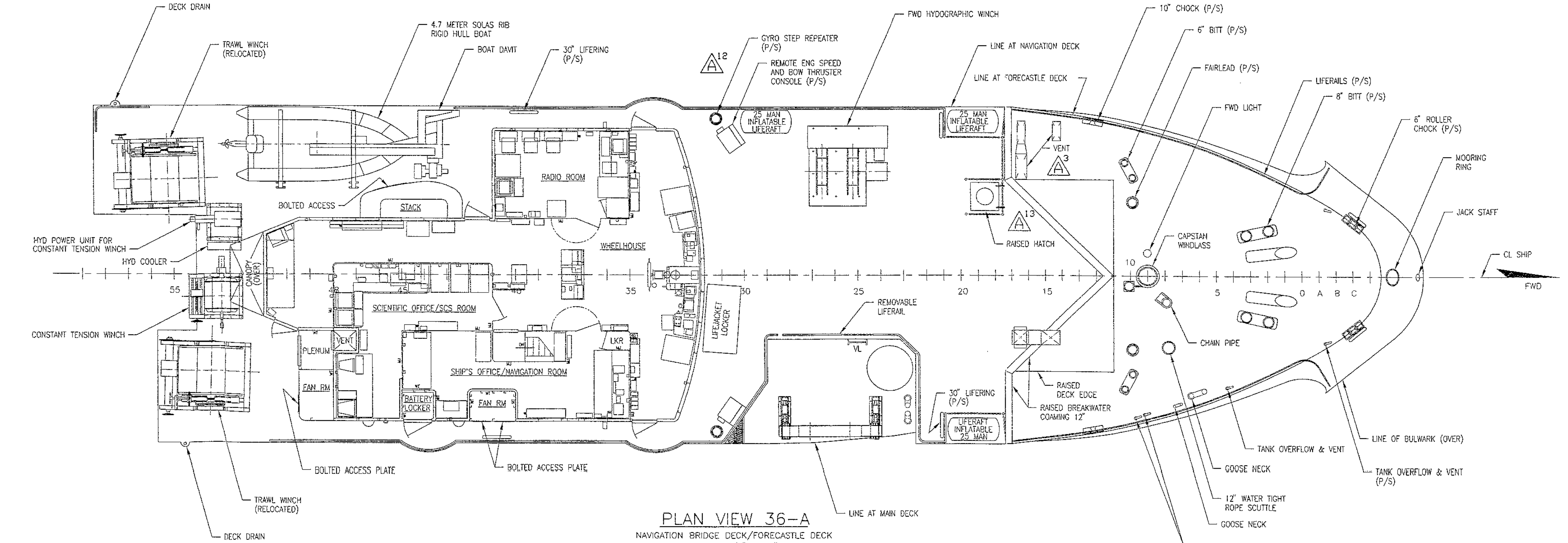

DECK DRAIN
TRAWL WINCH (RELOCATED)
4.7 METER SOLAS RIB RIGID HULL BOAT
BOAT DAVIT
30" LIFERING (P/S)
GYRO STEP REPEATER (P/S)
REMOTE ENG SPEED AND BOW THRUSTER CONSOLE (P/S)
25 MAN INFLATABLE LIFERAFT
FWD HYDOGRAPHIC WINCH
LINE AT NAVIGATION DECK
LINE AT FORECASTLE DECK
10" CHOCK (P/S)
6" BITT (P/S)
FAIRLEAD (P/S)
FWD LIGHT
LIFERAILS (P/S)
8" BITT (P/S)
6" ROLLER CHOCK (P/S)
MOORING RING
JACK STAFF
VENT
RAISED HATCH
CAPSTAN WINDLASS
CHAIN PIPE
CL SHIP
FWD
BOLTED ACCESS
STACK
RADIO ROOM
WHEELHOUSE
HYD POWER UNIT FOR CONSTANT TENSION WINCH
HYD COOLER
CANOPY (OVER)
CONSTANT TENSION WINCH
SCIENTIFIC OFFICE/SCS ROOM
SHIP'S OFFICE/NAVIGATION ROOM
PLENUM
VENT
FAN RM
BATTERY LOCKER
LKR
LIFEJACKET LOCKER
REMOVABLE LIFERAIL
VL
30" LIFERING (P/S)
LIFERAFT INFLATABLE 25 MAN
RAISED DECK EDGE
RAISED BREAKWATER COAMING 12"
LINE OF BULWARK (OVER)
TANK OVERFLOW & VENT
TANK OVERFLOW & VENT (P/S)
GOOSE NECK
12" WATER TIGHT ROPE SCUTTLE
GOOSE NECK
TANK OVERFLOW & VENT
BOLTED ACCESS PLATE
BOLTED ACCESS PLATE
TRAWL WINCH (RELOCATED)
DECK DRAIN
LINE AT MAIN DECK
12
3
13
55
40
35
30
25
20
15
10
5
0
A
B
C

PLAN VIEW 36–A

NAVIGATION BRIDGE DECK/FORECASTLE DECK

SCALE: 1/4"=1'-0"

SIZE	CAGE CODE	NOAA DRAWING NUMBER	REV
H	OYLJ5	DELA–085–09	A
SCALE: AS NOTED		SHEET 3 OF 5	

A 3 DELA–085–09

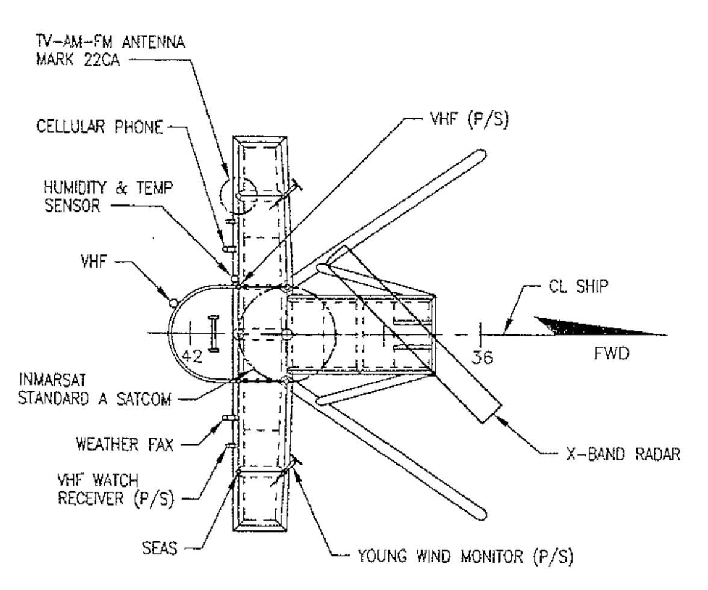
TV-AM-FM ANTENNA MARK 22CA
CELLULAR PHONE
HUMIDITY & TEMP SENSOR
VHF
VHF (P/S)
CL SHIP
42
36
FWD
INMARSAT STANDARD A SATCOM
WEATHER FAX
VHF WATCH RECEIVER (P/S)
SEAS
X-BAND RADAR
YOUNG WIND MONITOR (P/S)

PLAN VIEW 64–F
X–BAND RADAR PLATFORM
SCALE: 1/4"=1'–0"

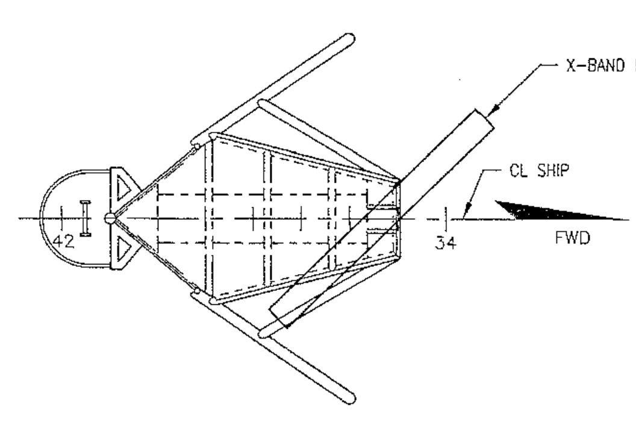
X-BAND RADAR
CL SHIP
42
34
FWD

PLAN VIEW 62–F
S–BAND RADAR PLATFORM
SCALE: 1/4"=1'–0"

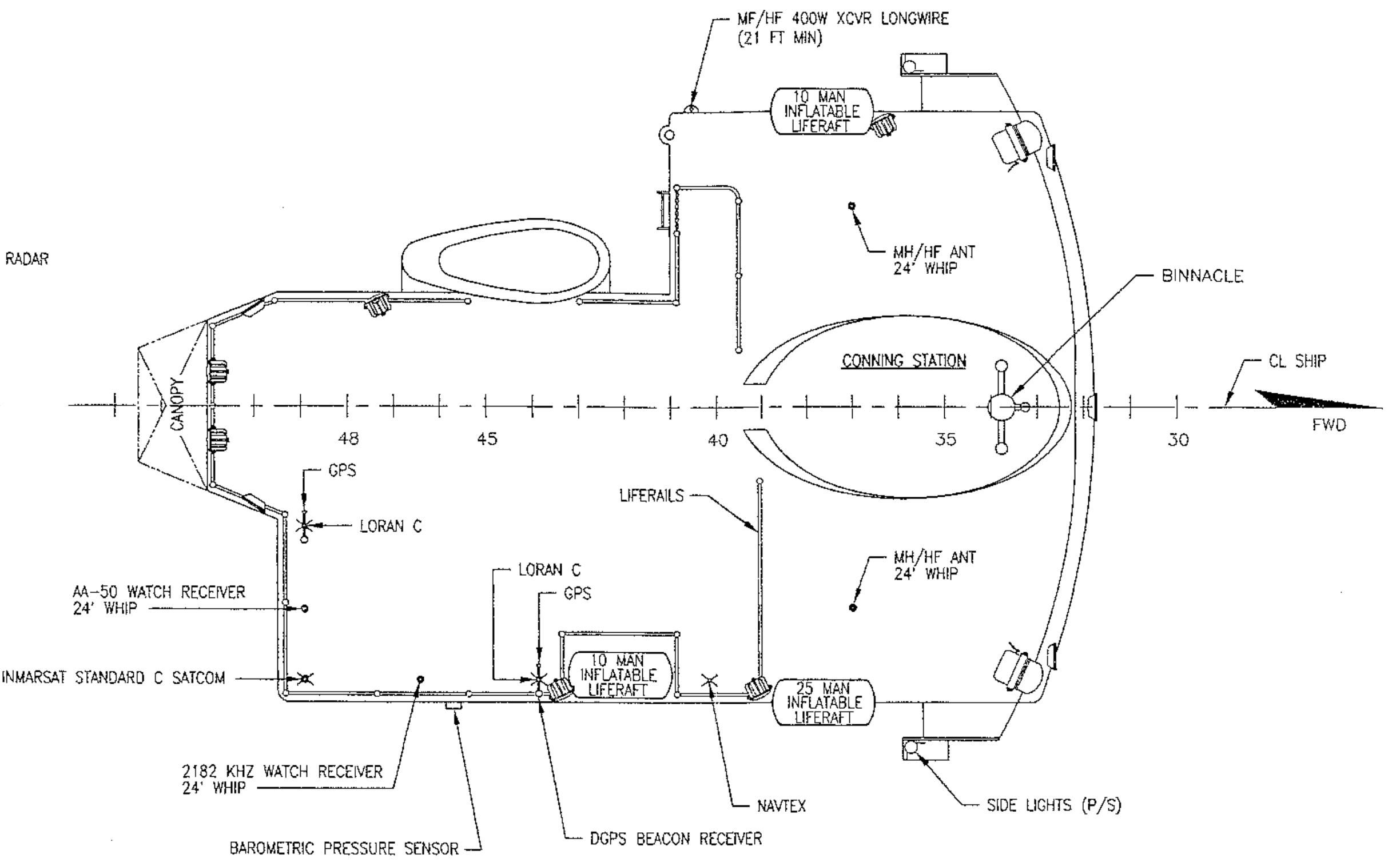
MF/HF 400W XCVR LONGWIRE (21 FT MIN)
10 MAN INFLATABLE LIFERAFT
MH/HF ANT 24' WHIP
BINNACLE
CONNING STATION
CL SHIP
FWD
CANOPY
48
45
40
35
30
GPS
LORAN C
LIFERAILS
AA-50 WATCH RECEIVER 24' WHIP
LORAN C
GPS
MH/HF ANT 24' WHIP
INMARSAT STANDARD C SATCOM
10 MAN INFLATABLE LIFERAFT
25 MAN INFLATABLE LIFERAFT
2182 KHZ WATCH RECEIVER 24' WHIP
NAVTEX
SIDE LIGHTS (P/S)
BAROMETRIC PRESSURE SENSOR
DGPS BEACON RECEIVER

PLAN VIEW 60–E
WHEELHOUSE TOP
SCALE: 1/4"=1'–0"

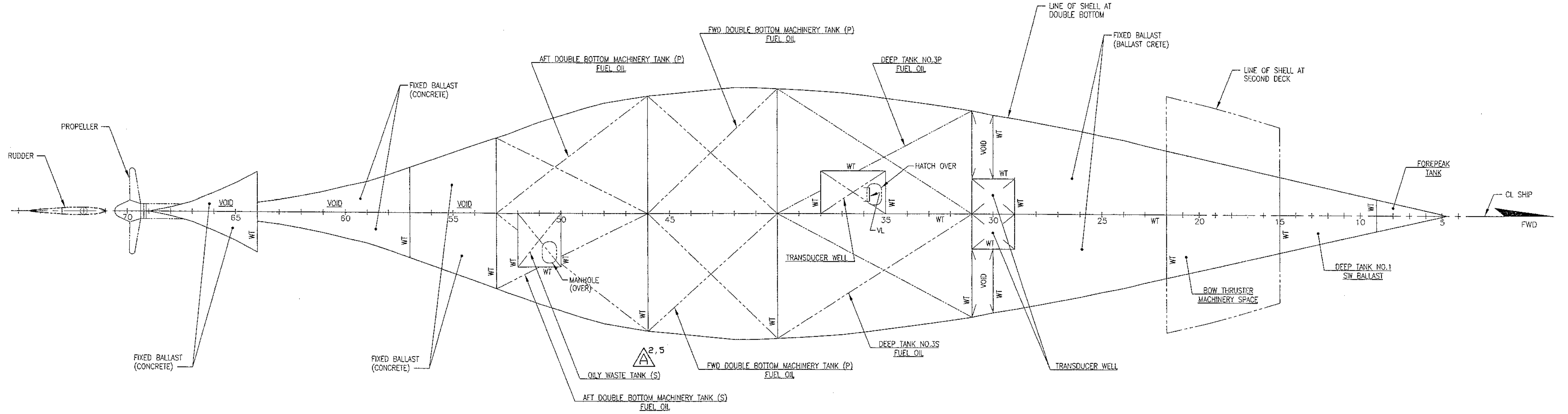
LINE OF SHELL AT DOUBLE BOTTOM
FWD DOUBLE BOTTOM MACHINERY TANK (P) FUEL OIL
FIXED BALLAST (BALLAST CRETE)
AFT DOUBLE BOTTOM MACHINERY TANK (P) FUEL OIL
DEEP TANK NO.3P FUEL OIL
LINE OF SHELL AT SECOND DECK
FIXED BALLAST (CONCRETE)
PROPELLER
RUDDER
HATCH OVER
FOREPEAK TANK
CL SHIP
FWD
VOID
WT
VL
70
65
60
55
50
45
35
30
25
20
15
10
5
MANHOLE (OVER)
TRANSDUCER WELL
DEEP TANK NO.1 SW BALLAST
BOW THRUSTER MACHINERY SPACE
FIXED BALLAST (CONCRETE)
FIXED BALLAST (CONCRETE)
DEEP TANK NO.3S FUEL OIL
A 2,5
OILY WASTE TANK (S)
FWD DOUBLE BOTTOM MACHINERY TANK (P) FUEL OIL
TRANSDUCER WELL
AFT DOUBLE BOTTOM MACHINERY TANK (S) FUEL OIL

PLAN VIEW 53–E
DOUBLEBOTTOM
SCALE: 1/4"=1'–0"

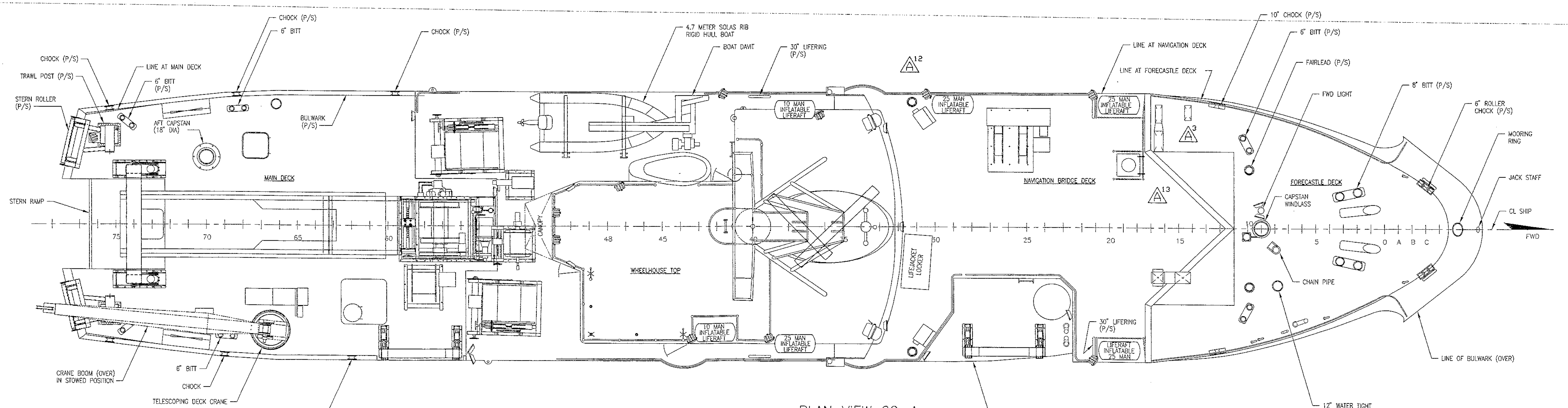
CHOCK (P/S)
6" BITT
CHOCK (P/S)
4.7 METER SOLAS RIB RIGID HULL BOAT
BOAT DAVIT
30" LIFERING (P/S)
A 12
LINE AT NAVIGATION DECK
LINE AT FORECASTLE DECK
10" CHOCK (P/S)
6" BITT (P/S)
FAIRLEAD (P/S)
FWD LIGHT
8" BITT (P/S)
6" ROLLER CHOCK (P/S)
MOORING RING
JACK STAFF
CL SHIP
FWD
CHOCK (P/S)
LINE AT MAIN DECK
TRAWL POST (P/S)
6" BITT (P/S)
STERN ROLLER (P/S)
AFT CAPSTAN (18" DIA)
BULWARK (P/S)
MAIN DECK
STERN RAMP
75
70
65
60
48
45
40
35
30
25
20
15
10
5
0
A
B
C
CANOPY
WHEELHOUSE TOP
10 MAN INFLATABLE LIFERAFT
25 MAN INFLATABLE LIFERAFT
LIFEJACKET LOCKER
NAVIGATION BRIDGE DECK
A 3
A 13
FORECASTLE DECK
CAPSTAN WINDLASS
CHAIN PIPE
30" LIFERING (P/S)
LIFERAFT INFLATABLE 25 MAN
CRANE BOOM (OVER) IN STOWED POSITION
6" BITT
CHOCK
TELESCOPING DECK CRANE
CHOCK
LINE AT MAIN DECK
12" WATER TIGHT ROPE SCUTTLE
LINE OF BULWARK (OVER)

PLAN VIEW 60–A
WEATHER DECKS = MAIN AND ABOVE
SCALE: 1/4"=1'–0"

NOAA DRAWING NUMBER	SHT	REV
DELA–085–09	4	A

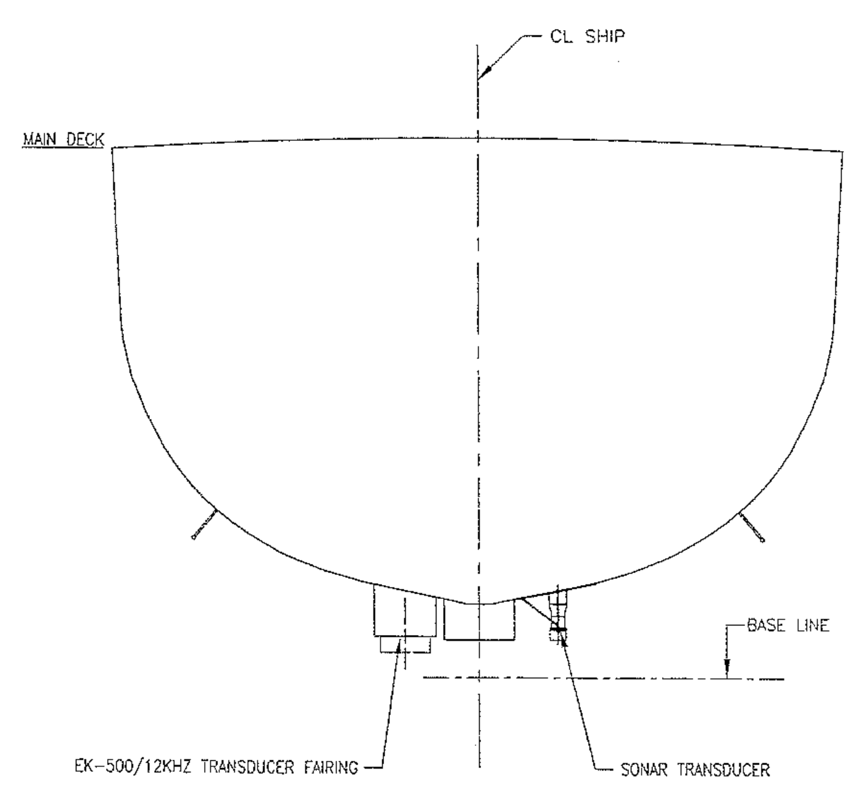
CL SHIP
MAIN DECK
BASE LINE
EK-500/12KHZ TRANSDUCER FAIRING
SONAR TRANSDUCER

SECTION 55–A
FR 30 LKG FWD
SCALE: 1/4"=1'–0"

HOUSE FRONT
PLATING = .3125
~~STIFFENERS 5"X3 1/2"X 5\16" ∠~~
SPACED 24"

SHELL PLATING
SIDE SHELL 1/2L AMIDSHIPS = .375
SIDE SHELL ENDS = .375
FORECASTLE SIDE = .375
SHEERSTRAKE & STRAKE BELOW IN WAY OF GALLOWS = .4375
ONE STRAKE OF PLATING IN WAY OF W.L. .375 THK, BETWEEN STEM AND 1/2L FWD
TRANSOM & STERN RAMP PLATING = .4375

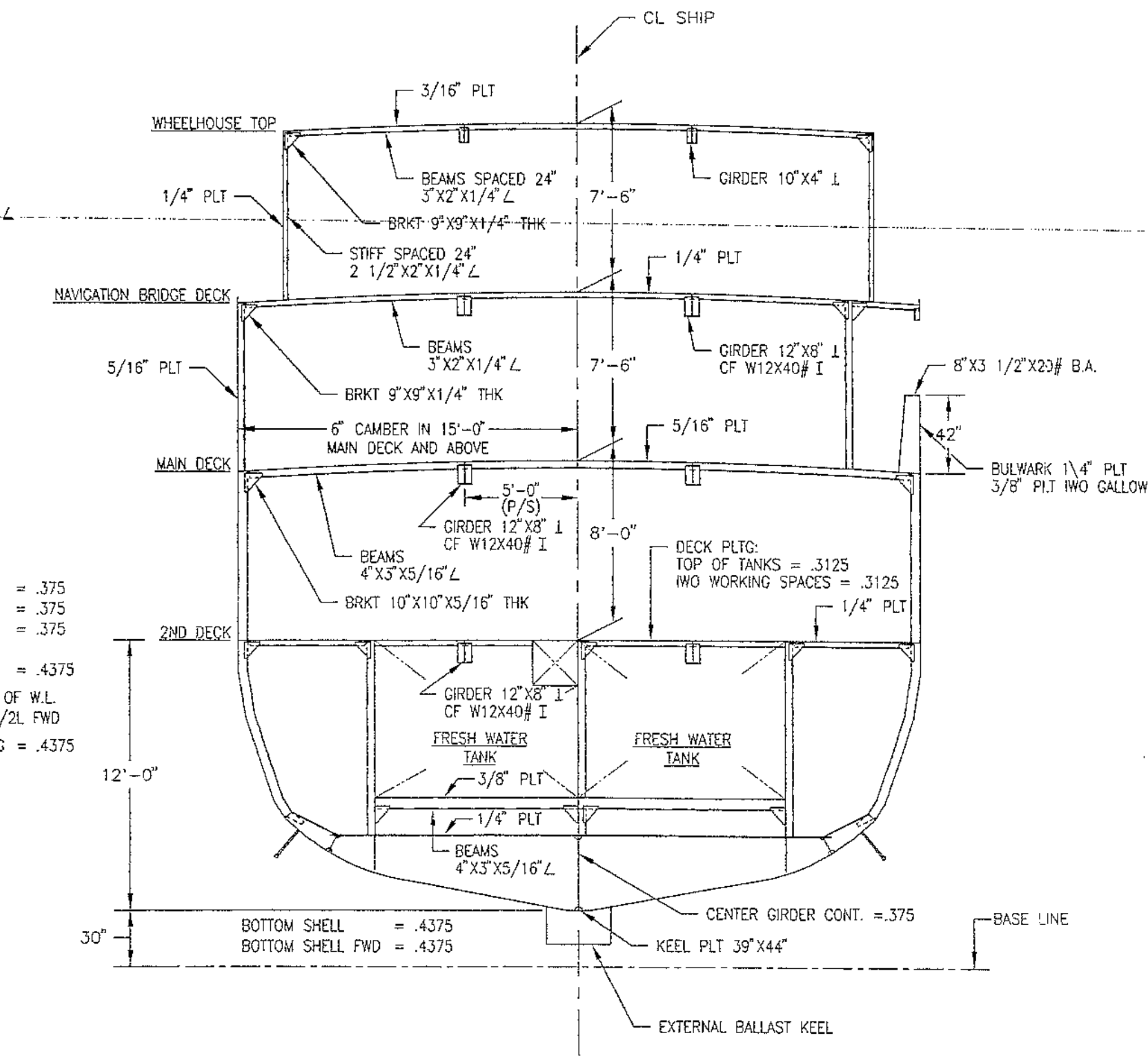
CL SHIP
3/16" PLT
WHEELHOUSE TOP
BEAMS SPACED 24" 3"X2"X1/4" ∠
GIRDER 10"X4" ⊥
1/4" PLT
BRKT 9"X9"X1/4" THK
7'–6"
STIFF SPACED 24" 2 1/2"X2"X1/4" ∠
1/4" PLT
NAVIGATION BRIDGE DECK
BEAMS 3"X2"X1/4" ∠
7'–6"
GIRDER 12"X8" ⊥ CF W12X40# I
5/16" PLT
BRKT 9"X9"X1/4" THK
8"X3 1/2"X20# B.A.
6" CAMBER IN 15'–0" MAIN DECK AND ABOVE
5/16" PLT
42"
MAIN DECK
BULWARK 1\4" PLT 3/8" PLT IWO GALLOWS
5'–0" (P/S)
GIRDER 12"X8" ⊥ CF W12X40# I
8'–0"
BEAMS 4"X3"X5/16" ∠
DECK PLTG: TOP OF TANKS = .3125 IWO WORKING SPACES = .3125
BRKT 10"X10"X5/16" THK
1/4" PLT
2ND DECK
GIRDER 12"X8" ⊥ CF W12X40# I
FRESH WATER TANK
FRESH WATER TANK
3/8" PLT
12'–0"
1/4" PLT
BEAMS 4"X3"X5/16" ∠
CENTER GIRDER CONT. =.375
BASE LINE
30"
BOTTOM SHELL = .4375
BOTTOM SHELL FWD = .4375
KEEL PLT 39"X44"
EXTERNAL BALLAST KEEL

SECTION 52–A
FR 39 LKG FWD
SCALE: 1/4"=1'–0"

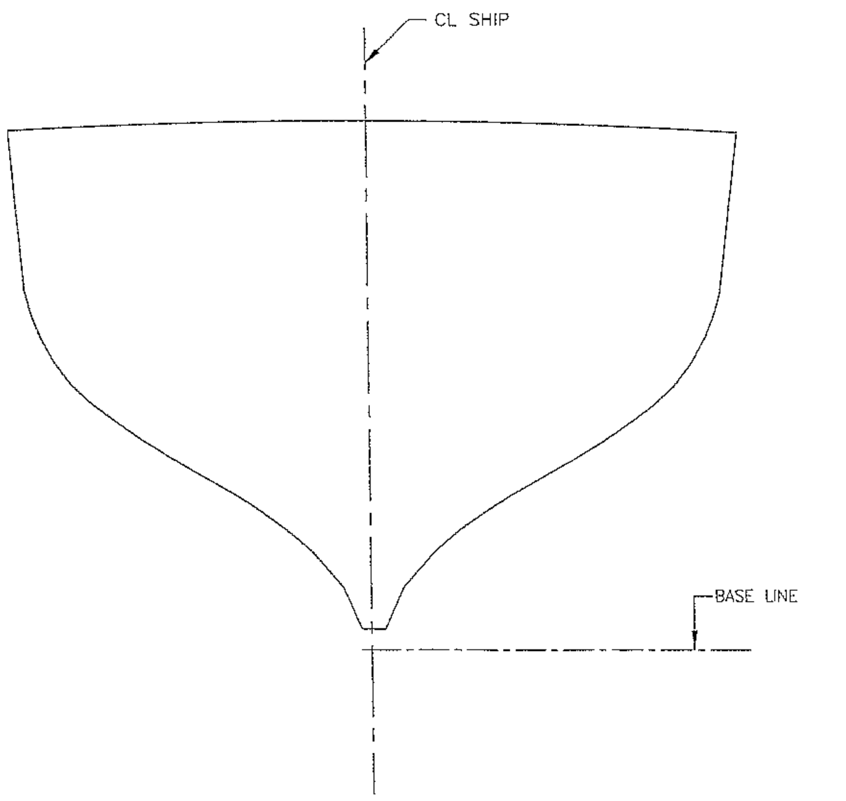
CL SHIP
MAIN DECK
BASE LINE

SECTION 50–A
FR 60 LKG FWD
SCALE: 1/4"=1'–0"

SIZE	CAGE CODE	NOAA DRAWING NUMBER	REV
H	OYLJ5	DELA–085–09	A
SCALE: AS NOTED		SHEET 4 OF 5	

LIST OF MACHINERY

ITEM NO.	DESCRIPTION	TYPE AND MODEL
1	SHIP SERVICE DIESEL GENERATOR (2)	STEWART & STEVENSON #6V92TAB-03
2	OIL-FIRED HOT WATER BOILER	MFD BY ALDRICH CO. L.E.S. INC #VW-110
3	FUEL OIL PURIFIER	DELAVAL #MAB-104
4	AIR COND CHILLED WATER PLANT	134A CARRIER CO. #90YH-040-G-134-6
5	HEATING/COOLING CIRCULATING PUMP (2)	WORTHINGTON MODEL D520, SIZE 1.25 X 1 X 4
6	FRESH WATER COMPRESSION TANK	
7	FRESH WATER EVAPORATOR PUMP (2)	
8	JACKET WATER BOOSTER PUMP	WORTHINGTON MODEL D824, SIZE 3 X 2 X 6
9	BILGE PUMP	WORTHINGTON MODEL D1021, SIZE 3 X 1.5 X 6
10	BILGE PUMP	WORTHINGTON #2DN32
11	BILGE MANIFOLD	
12	LOW SUCTION SEACHEST	
13	HIGH SUCTION SEACHEST	
14	SEACHEST STRAINER (2)	
15	FIRE PUMP	WORTHINGTON #D1021, SIZE 3 X 2 X 8
16	SALTWATER SERVICE PUMP	
17	SALTWATER EVAPORATOR PUMP	WALCO #50388
18	SANITARY PUMP	WORTHINGTON #D520
19	SANITARY COMPRESSION TANK	
20	EVAPORATOR	RILEY INC. #HJ-50A
21	POWER DIST PANEL, P6	
22	SHIP'S SERVICE SWITCHBOARD	CAROLINA SWITCH GEAR
23	37.5 KVA TRANSFORMER (3)	
24	25 KVA TRANSFORMER	
25	LOWER HYDRAULIC CHARGE PUMP CONTROLER	
26	ENGINEER'S ALARM PANEL (2)	HENSCHELL #60-017TYB
27	ENGINE ROOM GAGEBOARD	
28	MCHRY ALARM & MONITORING SYS CPU	ELTRONIC MARIME SYS INC.
29	DIAL TELEPHONE	PART OF/UNITED MARINE #UM-MPBX-50
30	BOW THRUSTER	OMNITHRUSTER INC. #HCT-600 TD
31	PROPULSION ENG REDUCTION GEAR	LUFKIN #2S-RLS 2100
32	UNCONTAMINATED SEAWATER PUMP	WORTHINGTON #D520, SIZE 1.25 X 1 X 4
33	SEAWATER PUMP CONTROL PANEL	
34	LOUDSPEAKER	
35	DIAL TELEPHONE WITH DRIPGUARD	PART OF/UNITED MARINE #UM-MPBX-50
36	STEARING GEAR ASSY	PROPULSION SYSTEMS INC.
37	STEARING GEAR HYDRAULIC PUMP (2)	PROPULSION SYSTEMS INC.
38	LATHE	SOUTHBEND
39	DRILL PRESS	CLAUSING DIVISION OF ATLAS PRESS CO.
40	GRINDER	DAYTON ELECTRIC CO. #32144
41	HYDRAULIC AXIAL PISTON PUMP W/60 HP MTR	DENISON PUMP CO. #P7W-2RIB-T10-00
42	HYDRAULIC PUMP CONTROL PANEL	
43	HYDRAULIC GAGEBOARD	
44	HYDRAULIC ACCUMULATORS, 7.5 GAL (4)	TOBUL ACCUMULATOR INC. #6.7A30-60
45	HFC-134A REFIGERATION PLANT (3)	CARRIER CO. #90YK024-134-6
46	POWER DIST PANEL	
47	GEAR OIL TANK	
48	ELECTRO-MOTIVE EQPT STOWAGE	G.M. CORP.
49	TOOLBOX/LOCKER	
50	LOCKER	
51	CO2 BOTTLE (9)	
52	PROPULSION ENGINE MUFFLER	
53	SHIP'S SERVICE DIESEL GENERATOR SILENCER (2)	FLORIDA DETROIT DIESEL
54	JACKET WATER BOOSTER HEATER	CHROMOLOX CO. #NWHIS-187515E4XX
55	CHILLED/HOT WATER EXPANSION TANK	DEYTENS SUPPLIED
56	POWER DIST PANEL, P430	
57	JACKET WATER EXPANSION TANK	
58	TRAWEL WINCH DIESEL	GM DETROIT DIESEL ENG DIVISION #7084-7202, 8V-71
59	TRAWEL WINCH HYDRAULIC PUMP (2)	WEG MOTORS LTD. #BL-1-18-143T
60	RIGHT ANGLE DRIVE UNIT	
61	TRAWEL WINCH MUFFLER	
62	TRAWEL WINCH HYD OIL COOLING PUMP	WORTHINGTON #P21G7052A KS
63	HEAT EXCHANGER	ROSS HEAT EXCHANGER CO.
64	LUBO TANK PUMP	DAYTON ELECTRIC MFR. #R678746 F788
65	MISC FITTING STOWAGE CABINET	
66	ARC WELDER	
67	TELEPHONE ACOUSTIC ENCLOSURE	
68	WINCH D.O. TANK FILTER	COMMERCIAL FILTER CORP.
69	PROPULSION DIESEL ENGINE	G.M. CORP #12-567C
70	THRUSTER J-BOX W/LOCAL CONTROLS	OMNITHRUSTER INC. DWG 5204-0D2-22000
71	HYDRAULIC MANIFOLD	OMNITHRUSTER INC. DWG 5204-0D2-12100
72	DUCT REHEATER	
73	EMERGENCY DIESEL GENERATOR	FLORIDA DETROIT DIESEL DWG 9501636 REV 2
74	EMERGENCY SWITCHBOARD	CAROLINA SWITCHGEAR INC. OR EQ
75	SOUND POWERED TELEPHONE	
76	LOCAL CONTROL PANEL	
77	EMERGENCY LOAD PANEL	
78	BATTERY CHARGER	
79	BILGE/BALLAST/EMERGENCY SW SVC PUMP	BARE & NAPA #2VM184TIDR7604DTL
80	PROPULSION DIESEL LUBO FILTER	
81	UPPER CHARGE PMP FUSE BOX	
82	ALARM DIST BOX	J-BOX #JBGA 10 RE-24 OR EQ
83	10 KVA TRANSFORMER (3)	
84	EXHAUST FAN	
85	POWER DIST PANEL	
86	LOWER CHARGE PMP CONTROLER	
87	BROMINATOR	EVERPURE INC. #SSFM-50AC-SERIES 9064-14
88	DIESEL OIL XFER PUMP (2)	WORTHINGTON #45-MARINE
89	JACKET WATER HEAT EXCHANGER	
90	ENGINE LUBO COOLER	
91	ENGINE LO XFER PUMP	
92	UPPER CHARGE PMP CONTROLER	
93	SEAWATER SERVICE PMP CONTROLER	
94	BILGE/BALLAST/EMERGENCY SW SVC PMP CTLR	
95	HOSE REEL	
96	MSD SILENCER	UNIVERSAL SILENCER #UR-1-1/2" 1097-76
97	LUBO STRAINER MANIFOLD	CUNO ENGINEERING CO. #14202-2
98	DIESEL OIL SUCTION MANIFOLD	
99	FAN CONTROLER	CUTLER-HAMMER
100	BILGE PUMP #2 CONTROLER	CUTLER-HAMMER
101	JACKET WATER BOOSTER PMP CONTROLER	CUTLER-HAMMER
102	FIRE PUMP CONTROLER	GENERAL ELECTRIC
103	SANITARY SW PMP CONTROLER	
104	BILGE PUMP CONTROLER	
105	LOWER HYDRAULIC CHARGE PUMP	WEG MOTORS LTD #BL-1-18-143T
106	AIR FLASK (2)	GARDNER-DENVER #2005925
107	AIR COMPRESSOR (2)	GARDNER-DENVER #ADDB909A
108	AIR CPSR #1 CONTROLER	CUTLER-HAMMER
109	AIR CPSR #2 CONTROLER	CUTLER-HAMMER
110	BOSTER HEATER CONTROLER	CHROMOLOX
111	OIL CONTENT MONITOR	MONITECH #160/829
112	WASTE OIL PUMP CONTROLER	SQUARE D
113	WASTE OIL PUMP	
114	OIL/WATER SEPERATOR	
115	AIR FLASK	
116	HOSE REEL	
117	LIGHT DIST PANEL	MCKINSTRY METAL WORKS
118	MCHRY ALARM & MONITORING REMOTE PANEL	ELTRONIC MARINE SYS INC.
119	CO2 BOTTLE (9)	
120	UPPER HYDRAULIC CHARGE PUMP	WEG MOTORS LTD #BL-1-18-143T
121	MCHRY ALARM & MONITORING MONITOR	ELTRONIC MARINE SYS INC.
122	MCHRY ALARM & MONITORING KEYPAD	ELTRONIC MARINE SYS INC.
123	ENGINE ROOM POWER PANEL	
124	WASTE WATER PUMP	ST. LOUIS SHIP F.A.S.T. SYS PART OF ASSY #26M
125	EFFLUENT PUMP	ST. LOUIS SHIP F.A.S.T. SYS PART OF ASSY #13M
126	MSD BLOWER ASSY	ST. LOUIS SHIP F.A.S.T. SYS PART OF ASSY #13M
127	EFFLUENT CONTROLER	ST. LOUIS SHIP F.A.S.T. SYS PART OF ASSY #13M
128	WASTE WATER PUMP CONTROLER	ST. LOUIS SHIP F.A.S.T. SYS PART OF ASSY #13M
129	HEATER CONTROLER	ST. LOUIS SHIP F.A.S.T. SYS PART OF ASSY #13M
130	CHLORINATOR	ST. LOUIS SHIP F.A.S.T. SYS PART OF ASSY #13M
131	MEDIA TANK #1	ST. LOUIS SHIP F.A.S.T. SYS PART OF ASSY #13M
132	MEDIA TANK #2	ST. LOUIS SHIP F.A.S.T. SYS PART OF ASSY #13M
133	WET WELL	ST. LOUIS SHIP F.A.S.T. SYS PART OF ASSY #26M
134	ELECTRIC HEATER (2)	
135	HOT WATER HEATER	HUBBELL #SH-200-9-SLT4
136	TRANSFORMER	JEFFERSON ELECTRIC #211-164
137	TRAWL WINCH HYD OIL CLG MOTOR CTLR	CUTLER-HAMMER
138	H/C CW (AFT) PUMP CONTROLER	CUTLER-HAMMER
139	H/C CW (FWD) PUMP CONTROLER	ALLEN-BRADLEY
140	D.O. XFER PMP #1 CONTROLER	GENERAL ELECTRIC
141	D.O. XFER PMP #2 CONTROLER	GENERAL ELECTRIC
142	L.O. XFER PMP COMTROLER	CUTLER-HAMMER
143	AUDIBLE ALARM WITH RED LIGHT	
144	12 VOLT BATTERY	
145	BATTERY CHARGER	
146	BATTERY CHARGER	
147	DIESEL OIL DAY TANK	DETYENS SUPPLIED
148	EMERGENCY SSDG EXH MUFFLER	FLORIDA DETROIT DIESEL

SIZE	CAGE CODE	NOAA DRAWING NUMBER	REV
H	OYLJ5	DELA-085-09	A
SCALE: AS NOTED		SHEET 5 OF 5	